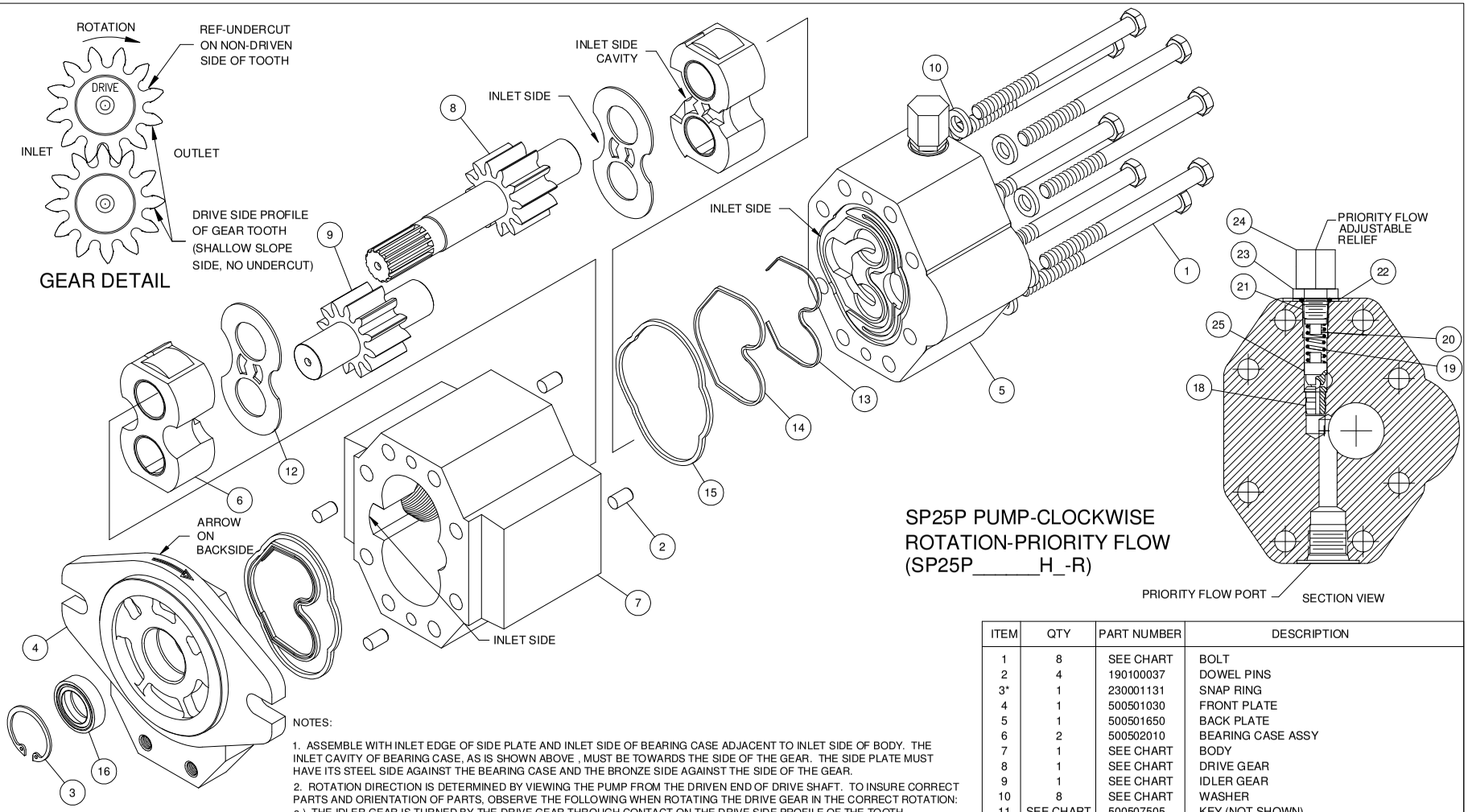

SP25P PUMP-CLOCKWISE ROTATION-PRIORITY FLOW (SP25P_____H_-R)

NOTES:

1. ASSEMBLE WITH INLET EDGE OF SIDE PLATE AND INLET SIDE OF BEARING CASE ADJACENT TO INLET SIDE OF BODY. THE INLET CAVITY OF BEARING CASE, AS IS SHOWN ABOVE , MUST BE TOWARDS THE SIDE OF THE GEAR. THE SIDE PLATE MUST HAVE ITS STEEL SIDE AGAINST THE BEARING CASE AND THE BRONZE SIDE AGAINST THE SIDE OF THE GEAR.
2. ROTATION DIRECTION IS DETERMINED BY VIEWING THE PUMP FROM THE DRIVEN END OF DRIVE SHAFT. TO INSURE CORRECT PARTS AND ORIENTATION OF PARTS, OBSERVE THE FOLLOWING WHEN ROTATING THE DRIVE GEAR IN THE CORRECT ROTATION:
   a.) THE IDLER GEAR IS TURNED BY THE DRIVE GEAR THROUGH CONTACT ON THE DRIVE SIDE PROFILE OF THE TOOTH (SHALLOW SLOPE SIDE WITH NO UNDERCUT). LIKE PROFILES ARE TOUCHING AND GEARS ROTATE FREELY WHEN ASSEMBLED IN THE BEARING CASE.
   b.) THE GEAR TEETH ARE COMING OUT OF MESH ON THE INLET SIDE OF THE PUMP.
3. FRONT AND BACK PLATE MUST ALSO BE ORIENTATED SO THE INLET SIDE IS ADJACENT TO THE INLET SIDE OF THE BODY.
4. BOLT TORQUE (LUBRICATED THREADS) 24 FT-LBS ±2 FT-LBS.
5. FRONT FACE OF BODY IS INDICATED BY THE MILLED RELIEFS AT THE SIDE OF BODY.
6. BACK-UP STRIP GOES TO THE INSIDE OF THE SQUARE CUT SEALS.
7. LOCKTITE RELIEF SEAT IN PLACE WITH COMPOUND #RC680.
8. STAKE RELIEF SEAT IN PLACE THROUGH BLIND HOLE IN REAR.
9. DURING BREAK-IN, A DUMMY PLUG IS BE TO INSTALLED IN THE PRIORITY FLOW CAVITY.
10. AFTER STANDARD BREAK-IN IS COMPLETE AND PERFORMANCE CHECKS HAVE BEEN MADE, THE DUMMY PLUG IS REPLACED WITH THE PRIORITY FLOW CARTRIDGE.
11. TORQUE THE PRIORITY FLOW CARTRIDGE TO 45-50 FT-LB.
12. FOR THE PRIORITY FLOW CHECKS, THE RELIEF IS SET TO THE FULL FLOW PRESSURE INDICATED BY THE MODEL CODE AND THEN RECHECKED. THE PERFORMANCE OF THE PRIORITY FLOW CARTRIDGE IS CHECKED WITH BOTH PORTS UNLOADED, WITH THE PRIORITY PORT ONLY LOADED TO 800 PSI, WITH THE EXCESS FLOW PORT ONLY LOADED TO 1500 PSI AND WITH BOTH PORTS LOADED TO 800 AND 1500 PSI RESPECTIVELY. WITH BOTH PORTS UNLOADED, PRIORITY FLOW MUST BE WITHIN RANGE INDICATED. PRIORITY FLOW MUST ALSO REMAIN STABLE AT THE OTHER CONDITIONS TESTED.
13. ALL PRIORITY FLOW PERFORMANCE TESTS ARE TO BE RUN AT 1400 RPM.

ITEM	QTY	PART NUMBER	DESCRIPTION
1	8	SEE CHART	BOLT
2	4	190100037	DOWEL PINS
3*	1	230001131	SNAP RING
4	1	500501030	FRONT PLATE
5	1	500501650	BACK PLATE
6	2	500502010	BEARING CASE ASSY
7	1	SEE CHART	BODY
8	1	SEE CHART	DRIVE GEAR
9	1	SEE CHART	IDLER GEAR
10	8	SEE CHART	WASHER
11	SEE CHART	500507505	KEY (NOT SHOWN)
12	2	500510010	WEAR PLATE
13*	2	500512100	BACK-UP STRIP
14*	2	500512051	SEAL, INNER
15*	2	500512050	SEAL, OUTER
16*	1	SEE CHART	SHAFT SEAL
17	1	240000910	O-RING FOR KEY (NOT SHOWN)
18	1	500507507	RELIEF SEAT
19	1	500507509	SPRING
20	1	500507510	ADAPTER
21	1	500507511	ADJUSTER
22	1	500507512	SEALING WASHER
23	1	500507513	LOCK NUT
24	1	500507514	ACORN NUT
25	1	500512111	POPPET
26	1	SEE CHART	PRIORITY FLOW CARTRIDGE (NOT SHOWN)
	*	PMCK-SP25	SEAL KIT (*ITEMS INCLUDED)

GEAR DETAIL

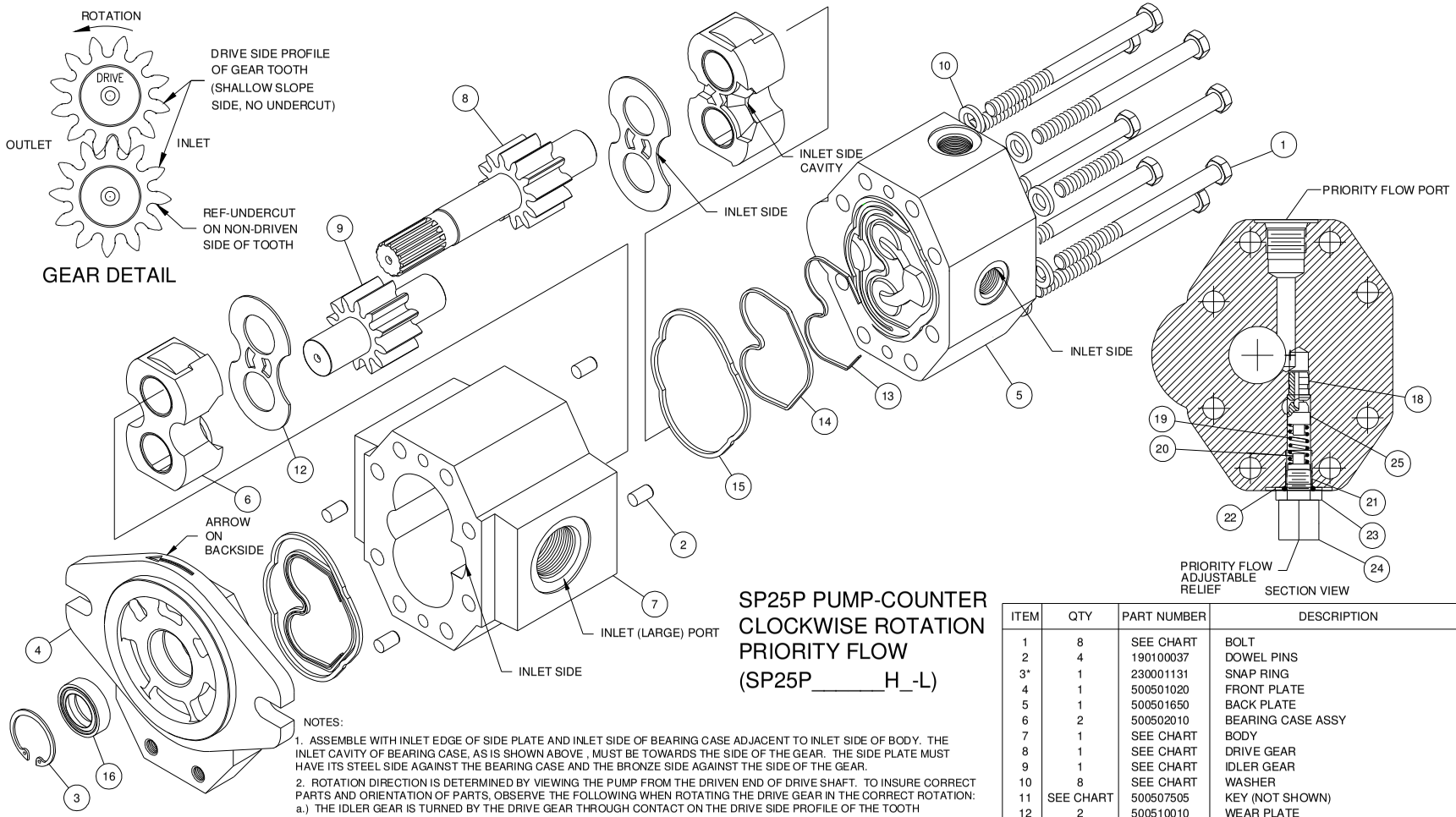

SP25P PUMP-COUNTER CLOCKWISE ROTATION PRIORITY FLOW (SP25P_____H_-L)

NOTES:

1. ASSEMBLE WITH INLET EDGE OF SIDE PLATE AND INLET SIDE OF BEARING CASE ADJACENT TO INLET SIDE OF BODY. THE INLET CAVITY OF BEARING CASE, AS IS SHOWN ABOVE , MUST BE TOWARDS THE SIDE OF THE GEAR. THE SIDE PLATE MUST HAVE ITS STEEL SIDE AGAINST THE BEARING CASE AND THE BRONZE SIDE AGAINST THE SIDE OF THE GEAR.
2. ROTATION DIRECTION IS DETERMINED BY VIEWING THE PUMP FROM THE DRIVEN END OF DRIVE SHAFT. TO INSURE CORRECT PARTS AND ORIENTATION OF PARTS, OBSERVE THE FOLLOWING WHEN ROTATING THE DRIVE GEAR IN THE CORRECT ROTATION:
   a.) THE IDLER GEAR IS TURNED BY THE DRIVE GEAR THROUGH CONTACT ON THE DRIVE SIDE PROFILE OF THE TOOTH (SHALLOW SLOPE SIDE WITH NO UNDERCUT). LIKE PROFILES ARE TOUCHING AND GEARS ROTATE FREELY WHEN ASSEMBLED IN THE BEARING CASE.
   b.) THE GEAR TEETH ARE COMING OUT OF MESH ON THE INLET SIDE OF THE PUMP.
3. FRONT AND BACK PLATE MUST ALSO BE ORIENTATED SO THE INLET SIDE IS ADJACENT TO THE INLET SIDE OF THE BODY.
4. BOLT TORQUE (LUBRICATED THREADS) 24 FT-LBS ±2 FT-LBS.
5. FRONT FACE OF BODY IS INDICATED BY THE MILLED RELIEFS AT THE SIDE OF BODY.
6. BACK-UP STRIP GOES TO THE INSIDE OF THE SQUARE CUT SEALS.
7. LOCKTITE RELIEF SEAT IN PLACE WITH COMPOUND #RC680.
8. STAKE RELIEF SEAT IN PLACE THROUGH BLIND HOLE IN REAR.
9. DURING BREAK-IN, A DUMMY PLUG IS BE TO INSTALLED IN THE PRIORITY FLOW CAVITY.
10. AFTER STANDARD BREAK-IN IS COMPLETE AND PERFORMANCE CHECKS HAVE BEEN MADE, THE DUMMY PLUG IS REPLACED WITH THE PRIORITY FLOW CARTRIDGE.
11. TORQUE THE PRIORITY FLOW CARTRIDGE TO 45-50 FT-LB.
12. FOR THE PRIORITY FLOW CHECKS, THE RELIEF IS SET TO THE FULL FLOW PRESSURE INDICATED BY THE MODEL CODE AND THEN RECHECKED. THE PERFORMANCE OF THE PRIORITY FLOW CARTRIDGE IS CHECKED WITH BOTH PORTS UNLOADED, WITH THE PRIORITY PORT ONLY LOADED TO 800 PSI, WITH THE EXCESS FLOW PORT ONLY LOADED TO 1500 PSI AND WITH BOTH PORTS LOADED TO 800 AND 1500 PSI RESPECTIVELY. WITH BOTH PORTS UNLOADED, PRIORITY FLOW MUST BE WITHIN RANGE INDICATED. PRIORITY FLOW MUST ALSO REMAIN STABLE AT THE OTHER CONDITIONS TESTED.
13. ALL PRIORITY FLOW PERFORMANCE TESTS ARE TO BE RUN AT 1400 RPM.

ITEM	QTY	PART NUMBER	DESCRIPTION
1	8	SEE CHART	BOLT
2	4	190100037	DOWEL PINS
3*	1	230001131	SNAP RING
4	1	500501020	FRONT PLATE
5	1	500501650	BACK PLATE
6	2	500502010	BEARING CASE ASSY
7	1	SEE CHART	BODY
8	1	SEE CHART	DRIVE GEAR
9	1	SEE CHART	IDLER GEAR
10	8	SEE CHART	WASHER
11	SEE CHART	500507505	KEY (NOT SHOWN)
12	2	500510010	WEAR PLATE
13*	2	500512100	BACK-UP STRIP
14*	2	500512051	SEAL, INNER
15*	2	500512050	SEAL, OUTER
16*	1	SEE CHART	SHAFT SEAL
17	1	240000910	O-RING FOR KEY (NOT SHOWN)
18	1	500507507	RELIEF SEAT
19	1	500507509	SPRING
20	1	500507510	ADAPTER
21	1	500507511	ADJUSTER
22	1	500507512	SEALING WASHER
23	1	500507513	LOCK NUT
24	1	500507514	ACORN NUT
25	1	500512111	POPPET
26	1	SEE CHART	PRIORITY FLOW CARTRIDGE (NOT SHOWN)
	*	PMCK-SP25	SEAL KIT (*ITEMS INCLUDED)

SHAFT CODE	ORING (ITEM 17)		KEY (ITEM 11)	
	PART NO.	NO. REQD	PART NO.	NO. REQD
2	240000910	1	500507505	1
1	---	0	---	0

SHAFT SEAL (ITEM 16)	
SEAL CODE	PART NO.
OMITTED (STANDARD BUNA-N)	500512501
H (MED. PRESSURE BUNA-N)	500512505

CODE	PRIORITY FLOW - GPM NOMINAL (RANGE)	PRIORITY FLOW CARTRIDGE (ITEM 26)
G	1.5 (1.35-1.65)	500512251
H	2.0 (1.80-2.20)	500512252
J	2.5 (2.25-2.75)	500512253
K	3.0 (2.70-3.30)	500512254
L	3.5 (3.15-3.85)	500512255
M	4.0 (3.60-4.40)	500512256
N	4.5 (4.05-4.95)	500512257
P	5.0 (4.50-5.50)	500512258

			DRIVE GEAR (ITEM 8)					
			LEFT HAND ROTATION		RIGHT HAND ROTATION			
PUMP SIZE	BOLTS (ITEM 1)	BODY (ITEM 7)	13 T SPLINE DRV SHAFT CODE 1	7/8 KEYED DRV SHAFT CODE 2	13 T SPLINE DRV SHAFT CODE 1	7/8 KEY DRV SHAFT CODE 2	IDLER GEAR (ITEM 9)	WASHERS (ITEM 10)
SP25P 19	170002088 (6.5)	500503370	500505200	500505300	500504200	500504300	500506200	500507500 (.060)
SP25P 22	170002090 (7)	500503371	500505201	500505301	500504201	500504301	500506201	500507503 (.450)
SP25P 27	170002090 (7)	500503372	500505202	500505302	500504202	500504302	500506202	500507506 (.240)
SP25P 32	170002090 (7)	500503373	500505203	500505303	500504203	500504303	500506203	500507500 (.060)
SP25P 38	170002128 (7.5)	500503374	500505204	500505304	500504204	500504304	500506204	500507502 (.350)
SP25P 44	170002128 (7.5)	500503375	500505205	500505305	500504205	500504305	500506205	500507506 (.240)
SP25P 52	170002103 (8)	500503376	500505206	500505306	500504206	500504306	500506206	500507503 (.450)
SP25P 63	170002103 (8)	500503377	500505207	500505307	500504207	500504307	500506207	500507500 (.060)