PRESSURE COMPENSATED PROPORTIONAL FLOW DIVIDERS

MODEL RD-200
PROPORTIONAL DIVIDER

MODEL RD-300
PROPORTIONAL DIVIDER WITH FREE RETURN CHECKS

The PRINCE model RD-200 valve is a pressure compensated proportional flow divider. The standard models of this valve will take one inlet flow and split it into two nearly equal outlet flows. The valve is also available with special ratio spools which will split the flow into two flows proportional to the ratio specified. Because the valve is pressure compensated the valve will maintain the divider ratio with quite different loads on the outlet ports as long as the inlet flow is within the range given in the chart below. **Flow through the RD-200 cannot be reversed.**

The PRINCE model RD-300 provides the same function as the RD-200 with the added feature of free reverse checks. This allows the reverse flow of oil from the outlet ports to the inlet port. **The reverse flow is not pressure compensated.**

VALVE SPECIFICATIONS:
Capacity: 30 gpm max inlet flow
Pressure: 3000 psi max

Weight: RD-200 7 lbs.
RD-300 7 lbs.

STANDARD MODELS AVAILABLE

MODEL NUMBER			DIVIDER RATIO	PORT SIZE	INLET FLOW RANGE
RD-237-8	**RD-337-8**		50:50	3/8 NPTF	4-8 GPM
RD-250-16	**RD-350-16**	**RD-350-AB-16**	50:50	1/2 NPTF	8-19 GPM
RD-275-30	**RD-375-30**	**RD-375-AB-30**	50:50	3/4 NPTF	16-30 GPM
RD-208-8	**RD-308-8**		50:50	3/4 16 SAE	4-8 GPM
RD-212-30	**RD-312-30**		50:50	1-1/16-12 SAE	16-30 GPM

In OEM quantities the RD-200 and RD-300 valves are available with special divider ratios. Ratios available are: 2:1, 80:20, 70:30, 60:40, and others as required. When ordering specify the divider ratio after the model number. EXAMPLE: RD-250-16 (70:30)

MODEL RD-500P
PROPORTIONAL DIVIDER WITH ADJUSTABLE ORIFICE

The PRINCE model RD-500P is a pressure compensated proportional flow divider valve with one fixed and one adjustable orifice. This valve provides the same function as the RD-200 except the divider ratio can be changed in the field.

VALVE SPECIFICATIONS:
Capacity: 30 gpm max inlet flow
Pressure: 3000 psi max

Weight: RD-500P 7 lbs.

STANDARD MODELS AVAILABLE

MODEL NUMBER	PORT SIZE	INLET FLOW RANGE
RD-537P-8	3/8 NPTF	4-8 GPM
RD-550P-16	1/2 NPTF	8-16 GPM
RD-575P-30	3/4 NPTF	16-30 GPM

MODEL RD-1000S
INTERNALLY PILOTED SEQUENCE VALVE WITH EXTERNAL DRAIN

The PRINCE valve model RD-1000S is an internally piloted adjustable sequence valve. This valve will prevent the flow of oil from going to the sequence port until the pressure on the inlet port reaches the sequence pressure. The sequence pressure is adjustable within the range given in chart below. A built in check valve allows flow from sequence port to inlet. To operate properly the **drain port must be connected to tank.** This valve is a spool type sequence valve and will provide smooth operation but should not be used in applications that require low leakage.

VALVE SPECIFICATIONS:
Capacity: 30 gpm max inlet flow
Pressure: 3000 psi max

Weight: 7 lbs.

STANDARD MODELS AVAILABLE

MODEL NUMBER	PORT SIZE INLET AND SEQUENCE	DRAIN PORT
RD-1050S___	1/2 NPTF	3/8 NPTF
RD-1075S___	3/4 NPTF	3/8 NPTF

SPRING	SEQUENCE PRESSURE
L	40-350 PSI
M	350-1700 PSI
H	1400-2500 PSI

To complete the model number fill in the blank with the spring letter that corresponds to desired counter balance pressure range. **EXAMPLE:** RD-1050SM for 350-1700 psi spring range.
Standard settings are 300 psi, 1500 psi and 1500 psi for ranges L, M and H respectively.

PRINCE MANUFACTURING CORPORATION • P.O. BOX 7000 • NORTH SIOUX CITY, SOUTH DAKOTA 57049-7000
URL: www.princehyd.com • E-MAIL: prince@princehyd.com
O.E.M. CUSTOMER SERVICE: (605) 235-1220 • FAX (712) 233-2181 DISTRIBUTOR CUSTOMER SERVICE: PHONE (605) 235-1220 • FAX (712) 233-2181

SEE PAGE 23 OF THE STANDARD PRODUCT PRICE LIST FOR PRICING

MODEL RD-200, RD-300, RD-300AB, RD-500P, AND RD-1000S PARTS BREAKDOWN AND DIMENSIONS

RD-200

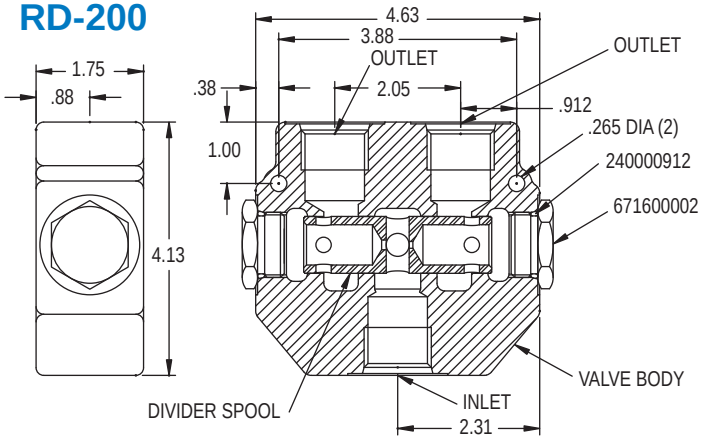

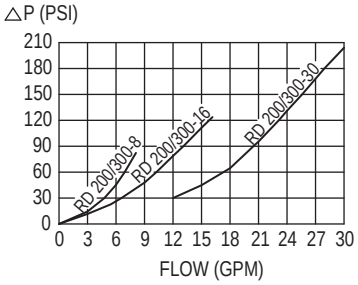

SYMBOL

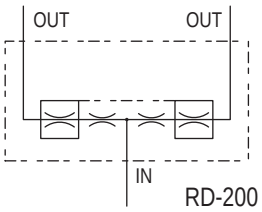

SEAL KIT NO. 660502001

RD-300

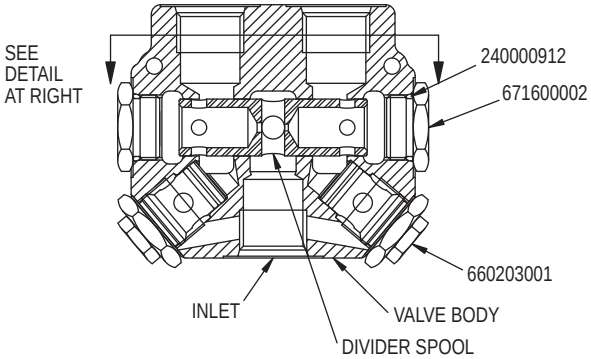

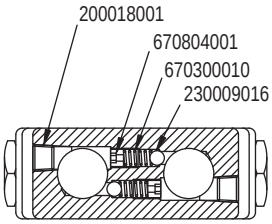

The RD-300AB valve has a built-in automatic bypass. This allows oil to crossover from one outlet to the other when the pressure difference between the two outlet reaches 750 PSI.

SYMBOL

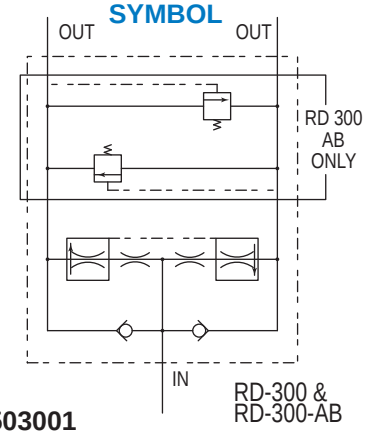

SEAL KIT NO. 660503001

RD-500P

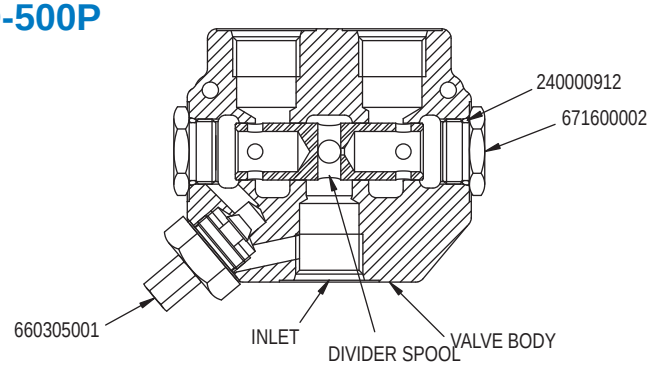

SYMBOL

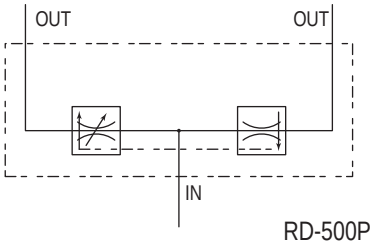

SEAL KIT NO. 660505001

RD-1000S

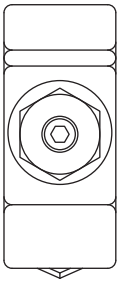

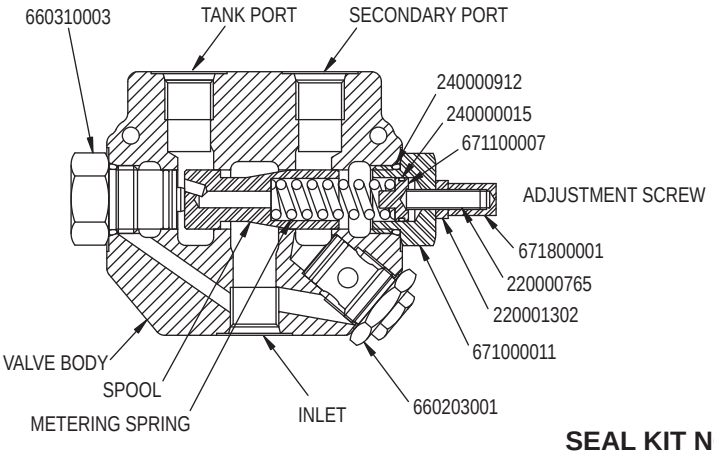

SYMBOL

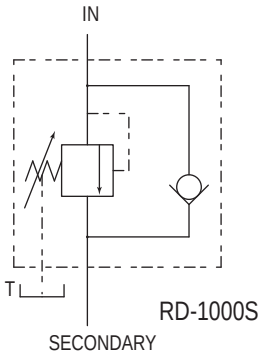

SEAL KIT NO. 660510001

VALVES