Prince

MAJESTIC LINE CYLINDER PARTS BOOK

Effective November 1, 2005

MAJESTIC LINE

2500 PSI TIE-ROD DOUBLE ACTING

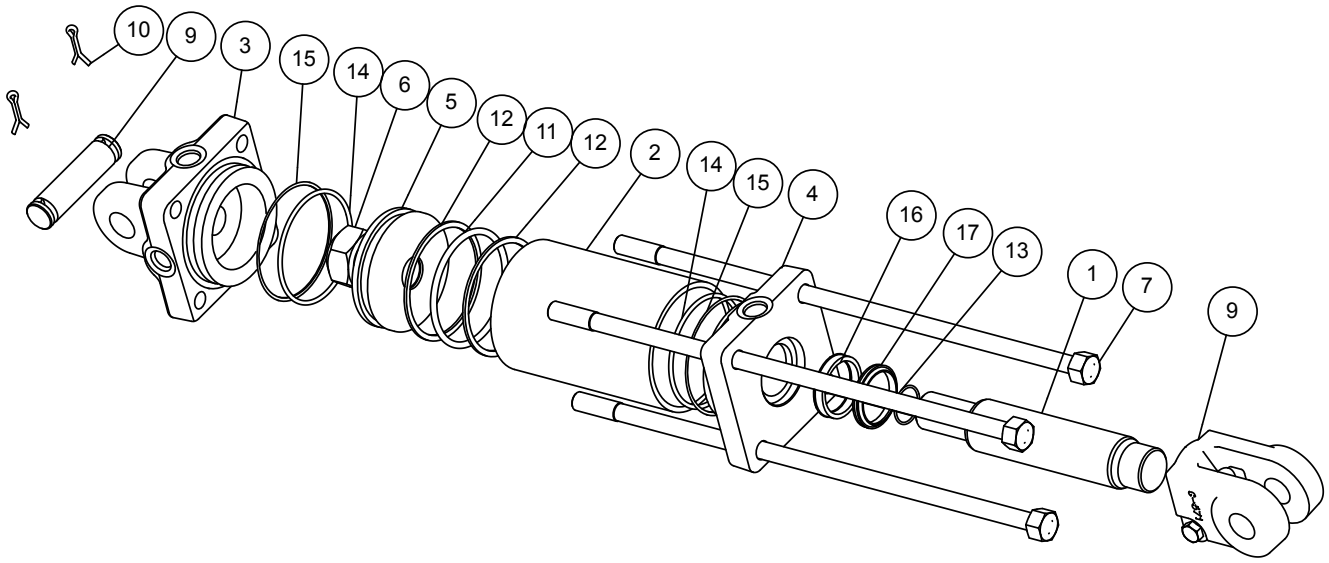

SAE-8400 SERIES 2” BORE 1” ROD

MODEL	ITEM	QTY	PART NO.	DESCRIPTION	NOTES
SAE-8404	1	1	010400006	PISTON ROD	
SAE-8406	1	1	010400007	PISTON ROD	
SAE-8408	1	1	010400008	PISTON ROD	
SAE-8410	1	1	010400010	PISTON ROD	
SAE-8404	2	1	051106063A	TUBE	
SAE-8406	2	1	051108063A	TUBE	
SAE-8408	2	1	051110063A	TUBE	
SAE-8410	2	1	051112063A	TUBE	
SAE-8400	3	1	141100024	BUTT	
SAE-8400	4	1	081100101	GLAND	
SAE-8400	5	1	071100004	PISTON ROD	
SAE-8400	6	1	220000208	LOCKNUT	
SAE-8404	7	4	170103081	TIE-ROD	
SAE-8406	7	4	170103101	TIE-ROD	
SAE-8408	7	4	170103121	TIE-ROD	
SAE-8410	7	4	170103141	TIE-ROD	
SAE-8400	8	2	190400001	CLEVIS PIN	
SAE-8400	9	1	100000425	CLEVIS ASSEMBLY	
SAE-8400	10	4	220001504	COTTER PIN	
SAE-8400	11	1	240000326	O-RING	KIT
SAE-8400	12	2	240034326	BU-WASHER	KIT
SAE-8400	13	1	240000018	O-RING	KIT
SAE-8400	14	2	240000224	O-RING	KIT
SAE-8400	15	2	240061224	BU-WASHER	KIT
SAE-8400	16	1	240037002	U-CUP	KIT
SAE-8400	17	1	250001214	WIPER	KIT
SAE-8400	*	2	240001326	O-RING	KIT
SAE-8400	*	1	240000214	O-RING	KIT
SAE-8400	*	1	240005214	BU-WASHER	KIT
SAE-8400			PMCK-8400	PACKING KIT	

* INCLUDED IN PACKING KIT AS REPLACEMENT SEALS FOR OLDER CYLINDERS

MAJESTIC LINE

2500 PSI TIE-ROD DOUBLE ACTING

(Continued)

SAE-7006 SERIES 2 1/2" BORE 1 1/8" ROD

MODEL	ITEM	QTY	PART NO.	DESCRIPTION	NOTES
SAE-7006	1	1	010500004	PISTON ROD	
SAE-7008	1	1	010500005	PISTON ROD	
SAE-7006	2	1	051308063A	TUBE	
SAE-7008	2	1	051310063A	TUBE	
SAE-7000	3	1	141300022	BUTT	
SAE-7000	4	1	081300146	GLAND	
SAE-7000	5	1	071300004	PISTON ROD	
SAE-7000	6	1	220000208	LOCKNUT	
SAE-7006	7	4	170201101	TIE-ROD	
SAE-7008	7	4	170201121	TIE-ROD	
SAE-7000	8	2	190400001	CLEVIS PIN	
SAE-7000	9	1	100000423	CLEVIS ASSEMBLY	
SAE-7000	10	4	220001504	COTTER PIN	
SAE-7000	11	1	240000330	O-RING	KIT
SAE-7000	12	2	240034330	BU-WASHER	KIT
SAE-7000	13	1	240000018	O-RING	KIT
SAE-7000	14	2	240000228	O-RING	KIT
SAE-7000	15	2	240061228	BU-WASHER	KIT
SAE-7000	16	1	240037071	U-CUP	KIT
SAE-7000	17	1	250001216	WIPER	KIT
SAE-7000	*	2	240001330	O-RING	KIT
SAE-7000	*	1	240000216	O-RING	KIT
SAE-7000	*	1	240005216	BU-WASHER	KIT
SAE-7000			PMCK-7000	PACKING KIT	

* INCLUDED IN PACKING KIT AS REPLACEMENT SEALS FOR OLDER CYLINDERS

SAE-7100 SERIES 2" BORE 1 1/8 " ROD

MODEL	ITEM	QTY	PART NO.	DESCRIPTION	NOTES
SAE-7106	1	1	010500004	PISTON ROD	
SAE-7108	1	1	010500005	PISTON ROD	
SAE-7106	2	1	051508063A	TUBE	
SAE-7108	2	1	051510063A	TUBE	
SAE-7100	3	1	141500043	BUTT	
SAE-7100	4	1	081500230	GLAND	
SAE-7100	5	1	071500003	PISTON ROD	
SAE-7100	6	1	220000208	LOCKNUT	
SAE-7106	7	4	170201102	TIE-ROD	
SAE-7108	7	4	170201122	TIE-ROD	
SAE-7100	8	2	190400001	CLEVIS PIN	
SAE-7100	9	1	100000423	CLEVIS ASSEMBLY	
SAE-7100	10	4	220001504	COTTER PIN	
SAE-7100	11	1	240000334	O-RING	KIT
SAE-7100	12	2	240034334	BU-WASHER	KIT
SAE-7100	13	1	240000018	O-RING	KIT
SAE-7100	14	2	240000232	O-RING	KIT
SAE-7100	15	2	240061232	BU-WASHER	KIT
SAE-7100	16	1	240037071	U-CUP	KIT
SAE-7100	17	1	250001216	WIPER	KIT
SAE-7100	*	2	240001334	O-RING	KIT
SAE-7100	*	1	240000216	O-RING	KIT
SAE-7100	*	1	240005216	BU-WASHER	KIT
SAE-7100			PMCK-7100	PACKING KIT	

* INCLUDED IN PACKING KIT AS REPLACEMENT SEALS FOR OLDER CYLINDERS

MAJESTIC LINE

2500 PSI TIE-ROD DOUBLE ACTING

(Continued)

SAE-7208A SERIES 3 1/2" BORE 1 1/8" ROD

MODEL	ITEM	QTY	PART NO.	DESCRIPTION	NOTES
SAE-7208A	1	1	010500345	PISTON ROD	
SAE-7208A	2	1	051710063A	TUBE	
SAE-7200A	3	1	1401700023	BUTT	
SAE-7200A	4	1	081700182	GLAND	
SAE-7200A	5	1	071700185	PISTON ROD	
SAE-7200A	6	1	220000209	LOCKNUT	
SAE-7208A	7	4	170201123	TIE-ROD	
SAE-7200A	8	2	190400001	CLEVIS PIN	
SAE-7200A	9	1	100000423	CLEVIS ASSEMBLY	
SAE-7200A	10	4	220001504	COTTER PIN	
SAE-7200A	11	1	240000338	O-RING	KIT
SAE-7200A	12	2	240034338	BU-WASHER	KIT
SAE-7200A	13	1	240000024	O-RING	KIT
SAE-7200A	14	2	240000236	O-RING	KIT
SAE-7200A	15	2	240061236	BU-WASHER	KIT
SAE-7200A	16	1	240037071	U-CUP	KIT
SAE-7200A	17	1	250001216	WIPER	KIT
SAE-7200A	*	2	2400001338	O-RING	KIT
SAE-7200A	*	1	240000216	O-RING	KIT
SAE-7200A	*	1	240005216	BU-WASHER	KIT
SAE-7200A			PMCK-7200A	PACKING KIT	

* INCLUDED IN PACKING KIT AS REPLACEMENT SEALS FOR OLDER CYLINDERS

SAE-8600 SERIES 4" BORE 1 1/2" ROD

MODEL	ITEM	QTY	PART NO.	DESCRIPTION	NOTES
SAE-8608	1	1	010800005	PISTON ROD	
SAE-8610	1	1	010800006	PISTON ROD	
SAE-8608	2	1	051910563A	TUBE	
SAE-8610	2	1	051912563A	TUBE	
SAE-8600	3	1	141900037	BUTT	
SAE-8600	4	1	081900231	GLAND	
SAE-8600	5	1	071900006	PISTON ROD	
SAE-8600	6	1	220000210	LOCKNUT	
SAE-8608	7	4	170301134	TIE-ROD	
SAE-8610	7	4	170301154	TIE-ROD	
SAE-8600	8	2	190400004	CLEVIS PIN	
SAE-8600	9	1	100000326	CLEVIS ASSEMBLY	
SAE-8600	10	4	220001504	COTTER PIN	
SAE-8600	11	1	240000342	O-RING	KIT
SAE-8600	12	2	240034342	BU-WASHER	KIT
SAE-8600	13	1	240000022	O-RING	KIT
SAE-8600	14	2	240000240	O-RING	KIT
SAE-8600	15	2	240061240	BU-WASHER	KIT
SAE-8600	16	1	240020059	U-CUP	KIT
SAE-8600	17	1	250001222	WIPER	KIT
SAE-8600	*	2	240001342	O-RING	KIT
SAE-8600	*	1	240000222	O-RING	KIT
SAE-8600	*	1	240005222	BU-WASHER	KIT
SAE-8600			PMCK-8600	PACKING KIT	

* INCLUDED IN PACKING KIT AS REPLACEMENT SEALS FOR OLDER CYLINDERS

MAJESTIC LINE

2500 PSI TIE-ROD DOUBLE ACTING

(Continued)

SAE-8200 SERIES 5” BORE 1 3/4” ROD

MODEL	ITEM	QTY	PART NO.	DESCRIPTION	NOTES
SAE-8208	1	1	011000038	PISTON ROD	
SAE-8210	1	1	011000040	PISTON ROD	
SAE-8208	2	1	052110875A	TUBE	
SAE-8210	2	1	052112875A	TUBE	
SAE-8200	3	1	142100035	BUTT	
SAE-8200	4	1	082100184	GLAND	
SAE-8200	5	1	072100002	PISTON ROD	
SAE-8200	6	1	220000212	LOCKNUT	
SAE-8208	7	4	170301136	TIE-ROD	
SAE-8210	7	4	170301156	TIE-ROD	
SAE-8200	8	2	190600016	CLEVIS PIN	
SAE-8200	9	1	100000362	CLEVIS ASSEMBLY	
SAE-8200	10	4	220001504	COTTER PIN	
SAE-8200	11	1	240000425	O-RING	KIT
SAE-8200	12	2	240034425	BU-WASHER	KIT
SAE-8200	13	1	240000026	O-RING	KIT
SAE-8200	14	2	240000248	O-RING	KIT
SAE-8200	15	2	240061248	BU-WASHER	KIT
SAE-8200	16	1	240020007	U-CUP	KIT
SAE-8200	17	1	250001327	WIPER	KIT
SAE-8200	*	2	240001425	O-RING	KIT
SAE-8200	*	1	240000327	O-RING	KIT
SAE-8200	*	1	240005327	BU-WASHER	KIT
SAE-8200			PMCK-8200	PACKING KIT	

* INCLUDED IN PACKING KIT AS REPLACEMENT SEALS FOR OLDER CYLINDERS