3000 PSI TIE-ROD CYLINDER PARTS BOOK

Effective November 1, 2005

3000 PSI TIE-ROD

RoyalPlate Plus® Plating

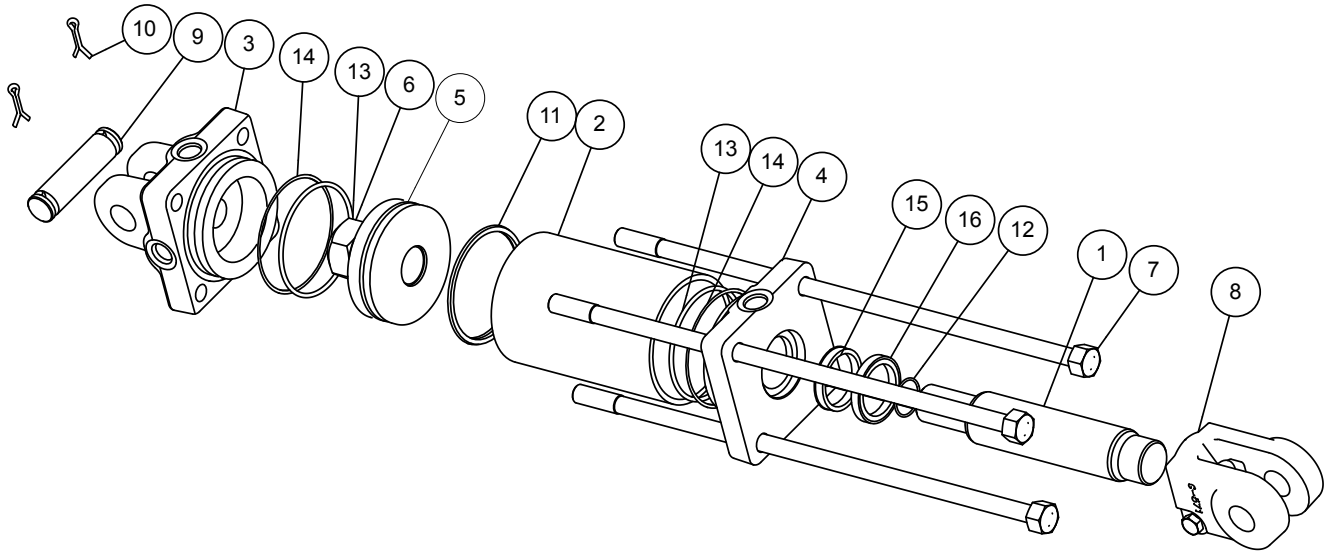

B200000 2” BORE 1 1/8” ROD

MODEL	ITEM	QTY	PART NO.	DESCRIPTION	NOTES
B200040ABAAA03B	1	1	010509750A	PISTON ROD	
B200060ABAAA03B	1	1	010511750A	PISTON ROD	
A200080ABAAA03B	1	1	010500472	PISTON ROD	
B200100ABAAA03B	1	1	010515750A	PISTON ROD	
B200120ABAAA03B	1	1	010517750A	PISTON ROD	
B200140ABAAA03B	1	1	010519750A	PISTON ROD	
A200160ABAAA03B	1	1	010527000A	PISTON ROD	
B200180ABAAA03B	1	1	010523750A	PISTON ROD	
B200200ABAAA03B	1	1	010525750A	PISTON ROD	
B200240ABAAA03B	1	1	010529750A	PISTON ROD	
B200300ABAAA03B	1	1	010535750A	PISTON ROD	
B200040ABAAA03B	2	1	021106063A	TUBE	
B200060ABAAA03B	2	1	051108063A	TUBE	
A200080ABAAA03B	2	1	051106063A	TUBE	
B200100ABAAA03B	2	1	051112063A	TUBE	
B200120ABAAA03B	2	1	015514063A	TUBE	
B200140ABAAA03B	2	1	051116063A	TUBE	
A200160ABAAA03B	2	1	051118063A	TUBE	
B200180ABAAA03B	2	1	051120063A	TUBE	
B200200ABAAA03B	2	1	051122063A	TUBE	
B200240ABAAA03B	2	1	051126063A	TUBE	
B200300ABAAA03B	2	1	051132063A	TUBE	
B200000	3	1	1411005SF	BUTT	
B200000	4	1	0811ABCSF	GLAND	
B200000	5	1	071100157	PISTON	
B200000	6	1	220000208	LOCKNUT	
B200040ABAAA03B	7	4	170103081	TIE-ROD ASSEMBLY	
B200060ABAAA03B	7	4	170103101	TIE-ROD ASSEMBLY	
A200080ABAAA03B	7	4	170103121	TIE-ROD ASSEMBLY	
B200100ABAAA03B	7	4	170103141	TIE-ROD ASSEMBLY	
B200120ABAAA03B	7	4	170103161	TIE-ROD ASSEMBLY	
B200140ABAAA03B	7	4	170103181	TIE-ROD ASSEMBLY	
A200160ABAAA03B	7	4	170103201	TIE-ROD ASSEMBLY	
B200180ABAAA03B	7	4	170103221	TIE-ROD ASSEMBLY	
B200200ABAAA03B	7	4	170103241	TIE-ROD ASSEMBLY	
B200240ABAAA03B	7	4	170103281	TIE-ROD ASSEMBLY	
B200300ABAAA03B	7	4	170103341	TIE-ROD ASSEMBLY	
B200000	8	1	100000423	CLEVIS ASSEMBLY	
B200000	9	2	190400001	CLEVIS PIN	
B200000	10	4	220001504	COTTER PIN	

3000 PSI TIE-ROD

RoyalPlate Plus® Plating
(Continued)

B200000 2” BORE 1 1/8” ROD - Continued

MODEL	ITEM	QTY	PART NO.	DESCRIPTION	NOTES
B200000	11	1	240060326	CROWN SEAL	KIT
B200000	12	1	240000018	O-RING	KIT
B200000	13	2	240000224	O-RING	KIT
B200000	14	2	240061224	BU-WASHER	KIT
B200000	15	1	240037071	U-CUP	KIT
B200000	16	1	250001216	WIPER	KIT
B200000			PMCK-B200000	PACKING KIT	

B250000 2 1/2” BORE 1 1/4” ROD

MODEL	ITEM	QTY	PART NO.	DESCRIPTION	NOTES
B250060ABAAA03B	1	1	010611750A	PISTON ROD	
A250080ABAAA03B	1	1	010600608	PISTON ROD	
B250100ABAAA03B	1	1	010615750A	PISTON ROD	
B250120ABAAA03B	1	1	010617750A	PISTON ROD	
B250140ABAAA03B	1	1	010619750A	PISTON ROD	
A250160ABAAA03B	1	1	010627000A	PISTON ROD	
B250180ABAAA03B	1	1	010623750A	PISTON ROD	
B250200ABAAA03B	1	1	010625750A	PISTON ROD	
B250240ABAAA03B	1	1	010629750A	PISTON ROD	
B250300ABAAA03B	1	1	010635750A	PISTON ROD	
B250060ABAAA03B	2	1	051308063A	TUBE	
A250080ABAAA03B	2	1	051310063A	TUBE	
B250100ABAAA03B	2	1	051312063A	TUBE	
B250120ABAAA03B	2	1	051314063A	TUBE	
B250140ABAAA03B	2	1	051316063A	TUBE	
A250160ABAAA03B	2	1	051318063A	TUBE	
B250180ABAAA03B	2	1	051320063A	TUBE	
B250200ABAAA03B	2	1	051322063A	TUBE	
B250240ABAAA03B	2	1	051326063A	TUBE	
B250300ABAAA03B	2	1	051332063A	TUBE	
B250000	3	1	1413005SF	BUTT	
B250000	4	1	0813BBESF	GLAND	
B250000	5	1	071300111	PISTON	
B250000	6	1	220000208	LOCKNUT	
B250060ABAAA03B	7	4	170201101	TIE-ROD ASSEMBLY	
A250080ABAAA03B	7	4	170201121	TIE-ROD ASSEMBLY	
B250100ABAAA03B	7	4	170201141	TIE-ROD ASSEMBLY	
B250120ABAAA03B	7	4	170201161	TIE-ROD ASSEMBLY	
B250140ABAAA03B	7	4	170201181	TIE-ROD ASSEMBLY	
A250160ABAAA03B	7	4	170201201	TIE-ROD ASSEMBLY	
B250180ABAAA03B	7	4	170201221	TIE-ROD ASSEMBLY	
B250200ABAAA03B	7	4	170201241	TIE-ROD ASSEMBLY	
B250240ABAAA03B	7	4	170201281	TIE-ROD ASSEMBLY	
B250300ABAAA03B	7	4	170201341	TIE-ROD ASSEMBLY	
B250000	8	1	100000423	CLEVIS ASSEMBLY	
B250000	9	2	190400001	CLEVIS PIN	
B250000	10	4	220001504	COTTER PIN	
B250000	11	1	240060330	CROWN SEAL	KIT
B250000	12	1	240000018	O-RING	KIT
B250000	13	2	240000228	O-RING	KIT
B250000	14	2	240061228	BU-WASHER	KIT
B250000	15	1	240037090	U-CUP	KIT
B250000	16	1	250014125	WIPER	KIT
B250000			PMCK-B250000	PACKING KIT	

3000 PSI TIE-ROD

RoyalPlate Plus® Plating

(Continued)

B300000 3” BORE 1 3/8”ROD

MODEL	ITEM	QTY	PART NO.	DESCRIPTION	NOTES
B300060ABAAA03B	1	1	010711750A	PISTON ROD	
A300080ABAAA03B	1	1	010700431	PISTON ROD	
B300100ABAAA03B	1	1	010715750A	PISTON ROD	
B300120ABAAA03B	1	1	010717750A	PISTON ROD	
B300140ABAAA03B	1	1	010719750A	PISTON ROD	
A300160ABAAA03B	1	1	010727000A	PISTON ROD	
B300180ABAAA03B	1	1	010723750A	PISTON ROD	
B300200ABAAA03B	1	1	010725750A	PISTON ROD	
B300240ABAAA03B	1	1	010729750A	PISTON ROD	
B300300ABAAA03B	1	1	010735750A	PISTON ROD	
B300360ABAAA03B	1	1	010741750A	PISTON ROD	
B300480ABAAA03B	1	1	010753750A	PISTON ROD	
B300060ABAAA03B	2	1	0515080563A	TUBE	
A300080ABAAA03B	2	1	051510063A	TUBE	
B300100ABAAA03B	2	1	051512063A	TUBE	
B300120ABAAA03B	2	1	051514063A	TUBE	
B300140ABAAA03B	2	1	051516063A	TUBE	
A300160ABAAA03B	2	1	051518063A	TUBE	
B300180ABAAA03B	2	1	051520063A	TUBE	
B300200ABAAA03B	2	1	051522063A	TUBE	
B300240ABAAA03B	2	1	051526063A	TUBE	
B300300ABAAA03B	2	1	051532063A	TUBE	
B300360ABAAA03B	2	1	051538063A	TUBE	
B300480ABAAA03B	2	1	051550063A	TUBE	
B300000	3	1	1415005SF	BUTT	
B300000	4	1	0815BBGSF	GLAND	
B300000	5	1	071500244	PISTON	
B300000	6	1	220000210	LOCKNUT	
B300060ABAAA03B	7	4	170201102	TIE-ROD ASSEMBLY	
A300080ABAAA03B	7	4	170201122	TIE-ROD ASSEMBLY	
B300100ABAAA03B	7	4	170201142	TIE-ROD ASSEMBLY	
B300120ABAAA03B	7	4	170201162	TIE-ROD ASSEMBLY	
B300140ABAAA03B	7	4	170201182	TIE-ROD ASSEMBLY	
A300160ABAAA03B	7	4	170212022	TIE-ROD ASSEMBLY	
B300180ABAAA03B	7	4	170201222	TIE-ROD ASSEMBLY	
B300200ABAAA03B	7	4	170201242	TIE-ROD ASSEMBLY	
B300240ABAAA03B	7	4	170201282	TIE-ROD ASSEMBLY	
B300300ABAAA03B	7	4	170201342	TIE-ROD ASSEMBLY	
B300360ABAAA03B	7	4	170201402	TIE-ROD ASSEMBLY	
B300480ABAAA03B	7	4	170201522	TIE-ROD ASSEMBLY	
B300000	8	1	100000423	CLEVIS ASSEMBLY	
B300000	9	2	190400001	CLEVIS PIN	
B300000	10	4	220001504	COTTER PIN	
B300000	11	1	240060334	CROWN SEAL	KIT
B300000	12	1	240000022	O-RING	KIT
B300000	13	2	240000232	O-RING	KIT
B300000	14	2	240061232	BU-WASHER	KIT
B300000	15	1	240037106	U-CUP	KIT
B300000	16	1	250014137	WIPER	KIT
B300000			PMCK-B300000	PACKING KIT	

3000 PSI TIE-ROD

RoyalPlate Plus® Plating

(Continued)

B350000 3 1/2" BORE 1 3/8" ROD

MODEL	ITEM	QTY	PART NO.	DESCRIPTION	NOTES
A350080ABAAA03B	1	1	B350000	PISTON ROD	
B350100ABAAA03B	1	1	010715750B	PISTON ROD	
B350120ABAAA03B	1	1	010717750B	PISTON ROD	
B350140ABAAA03B	1	1	010719750B	PISTON ROD	
A350160ABAAA03B	1	1	010727000B	PISTON ROD	
B350180ABAAA03B	1	1	010723750B	PISTON ROD	
B350200ABAAA03B	1	1	010725750B	PISTON ROD	
B350240ABAAA03B	1	1	010729750B	PISTON ROD	
B350300ABAAA03B	1	1	010735750B	PISTON ROD	
B350360ABAAA03B	1	1	010741750B	PISTON ROD	
B350480ABAAA03B	1	1	010753750B	PISTON ROD	
A350080ABAAA03B	2	1	051710063A	TUBE	
B350100ABAAA03B	2	1	051712063A	TUBE	
B350120ABAAA03B	2	1	051714063A	TUBE	
B350140ABAAA03B	2	1	051716063A	TUBE	
A350160ABAAA03B	2	1	051718063A	TUBE	
B350180ABAAA03B	2	1	051720063A	TUBE	
B350200ABAAA03B	2	1	051722063A	TUBE	
B350240ABAAA03B	2	1	051726063A	TUBE	
B350300ABAAA03B	2	1	051732063A	TUBE	
B350360ABAAA03B	2	1	051738063A	TUBE	
B350480ABAAA03B	2	1	051750063A	TUBE	
B350000	3	1	1417005SF	BUTT	
B350000	4	1	0817BBGSF	GLAND	
B350000	5	1	071700174	PISTON	
B350000	6	1	220000210	LOCKNUT	
A350080ABAAA03B	7	4	170201123	TIE-ROD ASSEMBLY	
B350100ABAAA03B	7	4	170201143	TIE-ROD ASSEMBLY	
B350120ABAAA03B	7	4	170201163	TIE-ROD ASSEMBLY	
B350140ABAAA03B	7	4	170201183	TIE-ROD ASSEMBLY	
A350160ABAAA03B	7	4	170201203	TIE-ROD ASSEMBLY	
B350180ABAAA03B	7	4	170201223	TIE-ROD ASSEMBLY	
B350200ABAAA03B	7	4	170201243	TIE-ROD ASSEMBLY	
B350240ABAAA03B	7	4	170201283	TIE-ROD ASSEMBLY	
B350300ABAAA03B	7	4	170201343	TIE-ROD ASSEMBLY	
B350360ABAAA03B	7	4	170201403	TIE-ROD ASSEMBLY	
B350480ABAAA03B	7	4	170201523	TIE-ROD ASSEMBLY	
B350000	8	1	100000577	CLEVIS ASSEMBLY	
B350000	9	2	190400004	CLEVIS PIN	
B350000	10	4	220001504	COTTER PIN	
B350000	11	1	240060338	CROWN SEAL	KIT
B350000	12	1	240000022	O-RING	KIT
B350000	13	2	240000236	O-RING	KIT
B350000	14	2	240061236	BU-WASHER	KIT
B350000	15	1	240037106	U-CUP	KIT
B350000	16	1	250014137	WIPER	KIT
B350000			PMCK-B350000	PACKING KIT	

3000 PSI TIE-ROD

RoyalPlate Plus® Plating

(Continued)

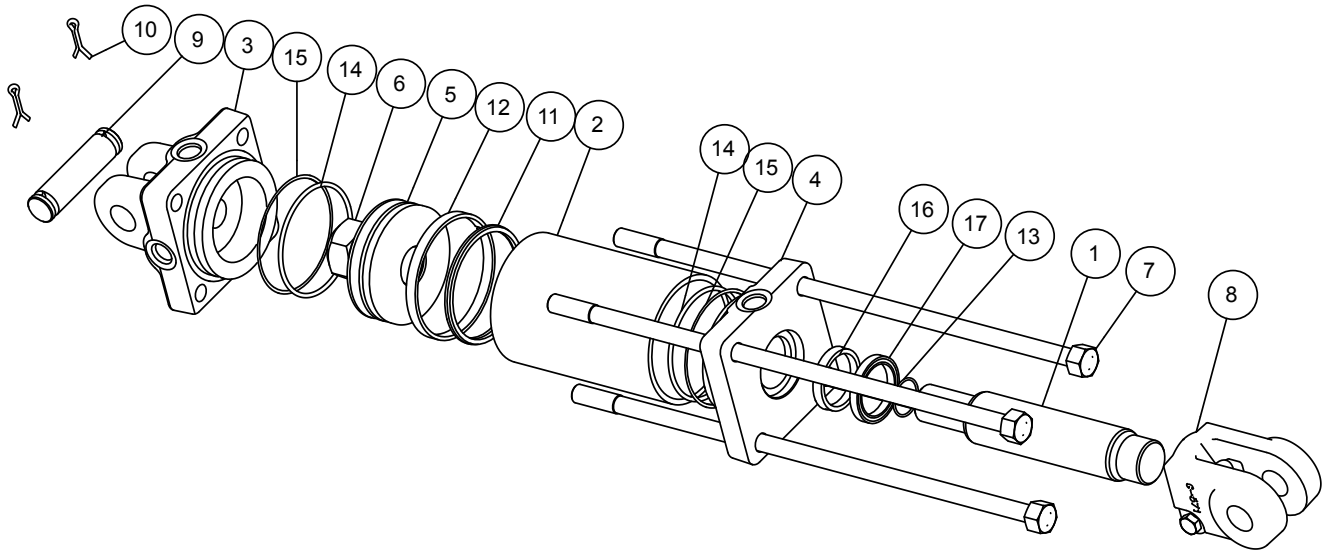

B400000 4” BORE 1 3/4” ROD

MODEL	ITEM	QTY	PART NO.	DESCRIPTION	NOTES
A400080ABACA03B	1	1	011015438A	PISTON ROD	
B400100ABACA03B	1	1	011015438A	PISTON ROD	
B400120ABACA03B	1	1	011017438A	PISTON ROD	
B400140ABACA03B	1	1	011019438A	PISTON ROD	
A400160ABACA03B	1	1	011026688A	PISTON ROD	
B400180ABACA03B	1	1	011023438A	PISTON ROD	
B400200ABACA03B	1	1	011025438A	PISTON ROD	
B400240ABACA03B	1	1	011029438A	PISTON ROD	
B400300ABACA03B	1	1	011035438A	PISTON ROD	
B400360ABACA03B	1	1	011041438A	PISTON ROD	
B400480ABACA03B	1	1	011053438A	PISTON ROD	
A400080ABACA03B	2	1	051910563A	TUBE	
B400100ABACA03B	2	1	051912563A	TUBE	
B400120ABACA03B	2	1	051914563A	TUBE	
B400140ABACA03B	2	1	051916563A	TUBE	
A400160ABACA03B	2	1	051918563A	TUBE	
B400180ABACA03B	2	1	051920563A	TUBE	
B400200ABACA03B	2	1	051922563A	TUBE	
B400240ABACA03B	2	1	051926563A	TUBE	
B400300ABACA03B	2	1	051932563A	TUBE	
B400360ABACA03B	2	1	051938563A	TUBE	
B400480ABACA03B	2	1	051950563A	TUBE	
B400000	3	1	1419005SF	BUTT	
B400000	4	1	0819BBNSF	GLAND	
B400000	5	1	071900260	PISTON	
B400000	6	1	220000212	LOCK NUT	
A400080ABACA03B	7	4	170301134	TIE-ROD ASSEMBLY	
B400100ABACA03B	7	4	170301154	TIE-ROD ASSEMBLY	
B400120ABACA03B	7	4	170301174	TIE-ROD ASSEMBLY	
B400140ABACA03B	7	4	170301194	TIE-ROD ASSEMBLY	
A400160ABACA03B	7	4	170301214	TIE-ROD ASSEMBLY	
B400180ABACA03B	7	4	170301234	TIE-ROD ASSEMBLY	
B400200ABACA03B	7	4	170301254	TIE-ROD ASSEMBLY	
B400240ABACA03B	7	4	170301294	TIE-ROD ASSEMBLY	
B400300ABACA03B	7	4	170301354	TIE-ROD ASSEMBLY	
B400360ABACA03B	7	4	170301414	TIE-ROD ASSEMBLY	
B400480ABACA03B	7	4	170301534	TIE-ROD ASSEMBLY	
B400000	8	1	100000326	CLEVIS ASSEMBLY	
B400000	9	2	190400035	CLEVIS PIN	

3000 PSI TIE-ROD

RoyalPlate Plus® Plating
(Continued)

B400000 4” BORE 1 3/4” ROD - Continued

MODEL	ITEM	QTY	PART NO.	DESCRIPTION	NOTES
B400000	10	4	220001504	COTTER PIN	
B400000	11	1	240060342	CROWN SEAL	KIT
B400000	12	1	240011119	BEARING RING	KIT
B400000	13	1	240000026	O-RING	KIT
B400000	14	2	240000240	O-RING	KIT
B400000	15	2	240061240	BU-WASHER	KIT
B400000	16	1	240020007	U-CUP	KIT
B400000	17	1	250014175	WIPER	KIT
B400000			PMCK-B400000	PACKING KIT	

B450000 4 1/2” BORE 2” ROD

MODEL	ITEM	QTY	PART NO.	DESCRIPTION	NOTES
B450080ACDDA03B	1	1	011114625A	PISTON ROD	
B450120ACDDA03B	1	1	011118625A	PISTON ROD	
B450140ACDDA03B	1	1	011120625A	PISTON ROD	
A450160ACDDA03B	1	1	011125875A	PISTON ROD	
B450180ACDDA03B	1	1	011124625A	PISTON ROD	
B450200ACDDA03B	1	1	011126625A	PISTON ROD	
B450240ACDDA03B	1	1	011130625A	PISTON ROD	
B450300ACDDA03B	1	1	011136625A	PISTON ROD	
B450360ACDDA03B	1	1	011142625A	PISTON ROD	
B450480ACDDA03B	1	1	011154625A	PISTON ROD	
B450080ACDDA03B	2	1	052011125A	TUBE	
B450120ACDDA03B	2	1	052015125A	TUBE	
B450140ACDDA03B	2	1	052017125A	TUBE	
A450160ACDDA03B	2	1	052019125A	TUBE	
B450180ACDDA03B	2	1	052021125A	TUBE	
B450200ACDDA03B	2	1	052023125A	TUBE	
B450240ACDDA03B	2	1	052027125A	TUBE	
B450300ACDDA03B	2	1	052033125A	TUBE	
B450360ACDDA03B	2	1	052039125A	TUBE	
B450480ACDDA03B	2	1	052051125A	TUBE	
B450000	3	1	1420007SG	BUTT	
B450000	4	1	0820BCASG	GLAND	
B450000	5	1	072000081	PISTON	
B450000	6	1	220000213	LOCKNUT	
B450080ACDDA03B	7	4	170301137	TIE-ROD ASSEMBLY	
B450120ACDDA03B	7	4	170301177	TIE-ROD ASSEMBLY	
B450140ACDDA03B	7	4	170301197	TIE-ROD ASSEMBLY	
A450160ACDDA03B	7	4	170301217	TIE-ROD ASSEMBLY	
B450180ACDDA03B	7	4	170301237	TIE-ROD ASSEMBLY	
B450200ACDDA03B	7	4	170301257	TIE-ROD ASSEMBLY	
B450240ACDDA03B	7	4	170301297	TIE-ROD ASSEMBLY	
B450300ACDDA03B	7	4	170301357	TIE-ROD ASSEMBLY	
B450360ACDDA03B	7	4	170301417	TIE-ROD ASSEMBLY	
B450480ACDDA03B	7	4	170301537	TIE-ROD ASSEMBLY	
B450000	8	1	100000362	CLEVIS ASSEMBLY	
B450000	9	2	190600024	CLEVIS PIN	
B450000	10	4	220001504	COTTER PIN	
B450000	11	1	240060346	CROWN SEAL	KIT
B450000	12	1	240011007	BEARING RING	KIT
B450000	13	1	240000028	O-RING	KIT
B450000	14	2	240000244	O-RING	KIT
B450000	15	2	240061244	BU-WASHER	KIT
B450000	16	1	240020009	U-CUP	KIT
B450000	17	1	250014200	WIPER	KIT
B450000			PMCK-B450000	PACKING KIT	

3000 PSI TIE-ROD

RoyalPlate Plus® Plating
(Continued)

B500000 5” BORE 2” ROD

MODEL	ITEM	QTY	PART NO.	DESCRIPTION	NOTES
B500080ACDDA03B	1	1	011114875B	PISTON ROD	
B500120ACDDA03B	1	1	011118875B	PISTON ROD	
B500140ACDDA03B	1	1	011120875B	PISTON ROD	
A500160ACDDA03B	1	1	011126125B	PISTON ROD	
B500180ACDDA03B	1	1	011124875B	PISTON ROD	
B500200ACDDA03B	1	1	011126875B	PISTON ROD	
B500240ACDDA03B	1	1	011130875B	PISTON ROD	
B500300ACDDA03B	1	1	011136875B	PISTON ROD	
B500360ACDDA03B	1	1	011142875B	PISTON ROD	
B500480ACDDA03B	1	1	011154875B	PISTON ROD	
B500080ACDDA03B	2	1	052110875A	TUBE	
B500120ACDDA03B	2	1	052114875A	TUBE	
B500140ACDDA03B	2	1	052116875A	TUBE	
A500160ACDDA03B	2	1	052118875A	TUBE	
B500180ACDDA03B	2	1	052120875A	TUBE	
B500200ACDDA03B	2	1	052122875A	TUBE	
B500240ACDDA03B	2	1	052126875A	TUBE	
B500300ACDDA03B	2	1	052132875A	TUBE	
B500360ACDDA03B	2	1	052138875A	TUBE	
B500480ACDDA03B	2	1	052150875A	TUBE	
B500000	3	1	1421007SG	BUTT	
B500000	4	1	0821BCASG	GLAND	
B500000	5	1	072100243	PISTON	
B500000	6	1	220000214	LOCKNUT	
B500080ACDDA03B	7	4	170401137	TIE-ROD ASSEMBLY	
B500120ACDDA03B	7	4	170401177	TIE-ROD ASSEMBLY	
B500140ACDDA03B	7	4	170401197	TIE-ROD ASSEMBLY	
A500160ACDDA03B	7	4	170401217	TIE-ROD ASSEMBLY	
B500180ACDDA03B	7	4	170401237	TIE-ROD ASSEMBLY	
B500200ACDDA03B	7	4	170401257	TIE-ROD ASSEMBLY	
B500240ACDDA03B	7	4	170401297	TIE-ROD ASSEMBLY	
B500300ACDDA03B	7	4	170401357	TIE-ROD ASSEMBLY	
B500360ACDDA03B	7	4	170401417	TIE-ROD ASSEMBLY	
B500480ACDDA03B	7	4	170401537	TIE-ROD ASSEMBLY	
B500000	8	1	100000362	CLEVIS ASSEMBLY	
B500000	9	2	190600024	CLEVIS PIN	
B500000	10	4	220001504	COTTER PIN	
B500000	11	1	240060350	CROWN SEAL	KIT
B500000	12	1	240011009	BEARING RING	KIT
B500000	13	1	240000033	O-RING	KIT
B500000	14	2	240000248	O-RING	KIT
B500000	15	2	240061248	BU-WASHER	KIT
B500000	16	1	240020009	U-CUP	KIT
B500000	17	1	250014200	WIPER	KIT
B500000			PMCK-B500000	PACKING KIT	